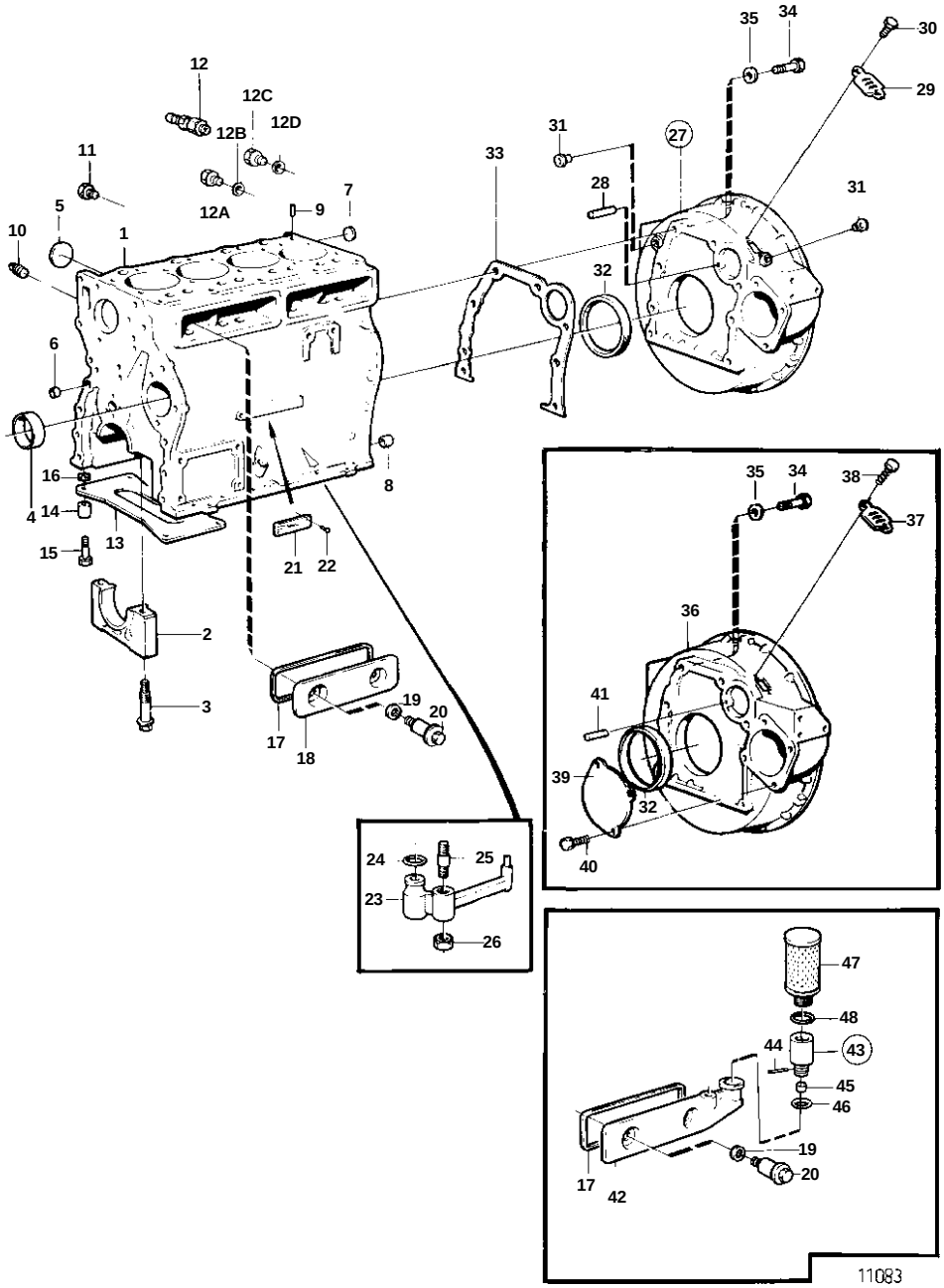
35
34
30
29
12
12C
12D
12B
12A
11
5
10
1
9
7
33
31
27
28
31
32
6
4
16
14
13
15
8
21
22
2
3
17
18
19
20
35
34
38
37
36
41
39
32
40
24
25
23
26
47
48
44
43
45
46
19
20
17
42
11083

REF	PART NO.	QTY	DESCRIPTION		NOTES
1	860730	1	Cylinder block		SN-2203118631
					REPL BY 861015
	861015	1	Cylinder block		SN2203118632-
2		5	· BEARING CAP		
3	860464	10	· Flange screw		SN-2203118631
	861005	10	· Flange screw		SN2203118632-
4	1542067	5	· Bushing		
5	463905	2	· Expansion plug		
6	955083	4	· Cap plug		
7	1542263	1	· Expansion plug		
8	415311	3	· Sleeve		
9	946402	2	· Pin		
10	952077	2	Plug		
11	191026	2	Plug		
12	947893	1	Drain cock		
13		1	PLATE		
14	1545160	4	Spacer sleeve		
15	965187	4	Screw		
16	1545204	4	Spacer sleeve		
17	1542052	2	Rubber seal		
18	1542050	2	Inspection lid		STD
19	469846	4	Sealing ring		
20	859447	4	Shoulder screw		
21		1	ENGINE SIGN		
22	950885	2	Drive screw		
23	1542320	4	Oil jet		
24	955981	4	O-ring		
25	1542380	4	Stud		
26	946035	4	Lock nut		
27	860690	1	Flywheel housing		
28	404069	1	· Setting indicator		
29	407092	1	· Cover		
30	965175	2	· Screw		
31	860926	2	· Plug		
32	860971	1	Sealing ring		
33	829487	1	Gasket		
34	965185	6	Flange screw		L = 40 MM
	965220	2	Flange screw		L = 45 MM
35	941908	8	Spring washer		